A longitudinal model describing the relationship between warfarin dose and INR response taking CYP2C9, VKORC1 and age into account

UPPSALA UNIVERSITET

AK Hamberg (1), JD Lindh (2), M Wadelius (1), A Rane (2), ML Dahl (1), EN Jonsson (3)(4)

(1) Dep. of Medical Sciences, Clinical Pharmacology, Uppsala University, Sweden, (2) Div. of Clinical Pharmacology, Karolinska University Hospital Huddinge, Stockholm, Sweden (3) Dep. of Pharmaceutical Biosciences, Uppsala University, Sweden, (4) Exprimo NV, Mechelen, Belgium

Conclusion

The reformulated K-PD model reduces the need for PK data and enables robust assessment of INR response and dose predictions even in individuals with rare genotype combinations.

Background

- Warfarin act through inhibition of VKORC1 in the recycling of Vitamin K, resulting in depletion of activated coagulation factors (see Figure 1).

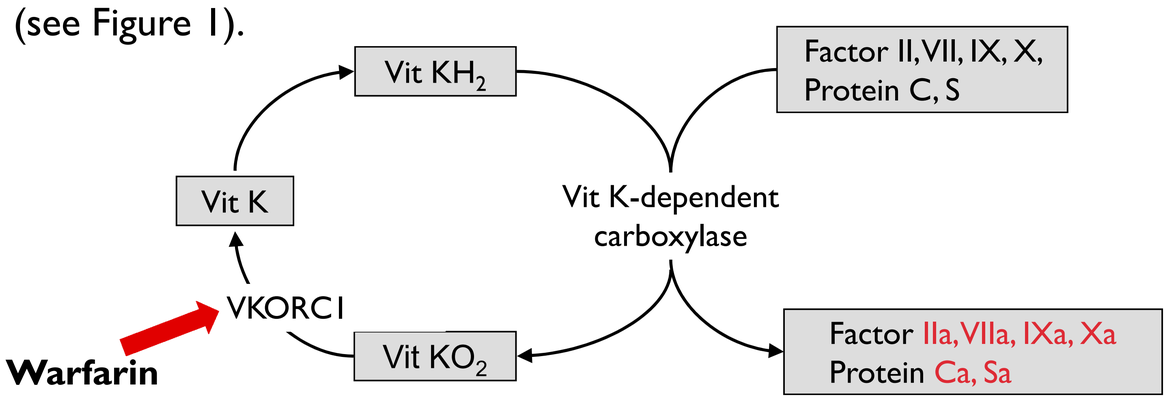

Figure 1. The Vitamin K cycle including VKORC1 - the polymorphic target enzyme for warfarin (a=activated)

- Due to large variability in the dose response and a narrow therapeutic index, the dose needs to be individually titrated.
- Polymorphism in CYP2C9 causes large variability in PK of S-warfarin and polymorphisms in VKORC1 contribute to the variability in PD.
- Genotyping have been suggested as a tool to improve outcome of warfarin therapy.

Objective

- To reformulate and update a previous NONMEM model [1] to describe the relationship between warfarin dose and INR response.

Materials and Methods

S-Warfarin PK, including covariate effects on CL, was estimated from high quality single dose data from an Italian study [1]. Contribution of each CYP2C9 allele was estimated separately and combined to yield genotype effect on CL. The K-PD model was developed on data from a subset (n=139) of the WARG study [2] enriched for rare genotypes and single dose INR from the Italian data. The remaining WARG data were used for internal model qualification and final parameter estimates.

Table 1 Patient demographics

	Italian data	WARG subset	WARG
N (F/M)	57 (15/42)	139 (54/85)	1426 (523/903)
Median Age, years (range)	72 (46-87)	64 (24-88)	68 (18-92)
CYP2C9 genotype, N (%)			
*1/*1 *2/*2	34 (59.6) 3(5.3)	29 (20.9) 20 (14.4)	943 (66.1) 20 (1.4)
*1/*2 *2/*3	11 (19.3) 0 (-)	30 (21.6) 17 (12.2)	263 (18.4) 17 (1.2)
*1/*3 *3/*3	9 (15.8) 0 (-)	35 (25.2) 8 (5.8)	175 (12.3) 8 (0.6)
Allele frequency, N	88/17/9	123/87/68	2324/320/208
*1/*2/*3 (%)	(77)/(15)/(8)	(44)/(31)/(25)	(81)/(11)/(8)
VKORC1 genotype, N (%)			
GG	22 (39)	53 (38)	521 (37)
GA	23 (41)	57 (41)	691 (48)
AA	11 (20)	29 (21)	214 (15)
Allele frequency, N	67/45	163/115	1733/1119
G/A (%)	(60)/(40)	(59)/(61)	(61)/(39)

Contribution of each VKORC1 allele was estimated separately and combined to yield genotype effects on PD. CL was included as a covariate in the K-PD model as described by Jacqmin et al [3].

Results

PK: Estimated CL per *1, *2 and *3 allele was 0.174, 0.0879 and 0.0422 l/h for a 72 year old, and with an age effect of 0.57% change per year.

K-PD-model: The final model accounted for the delay between exposure and INR response through two parallel transit compartment chains (Figure 2). The model described the data well (Figure 3) and passed internal validation tests. Covariates included in the final model were CL, including CYP2C9 genotype and age effects from the PK analysis, and VKORC1 genotype on EC_{50}. Final parameter estimates are presented in Table 2.

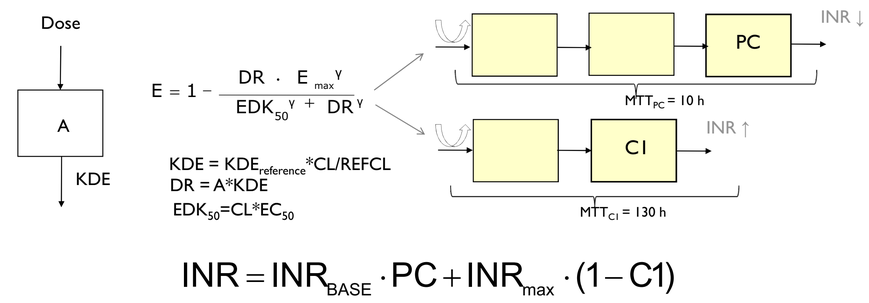

Figure 2. Schematic overview of the K-PD-model

Table 2 Model Parameter Estimates

	WARG subset + Italian data, n=196 (model building data set)	WARG + Italian data, n=1483	**WARG only n=1426** (95% CI)
$KDE_{reference}$ [a] (h^{-1})	0.0880	0.0847	**0.0868** (0.0779-0.0957)
EC_{50} GG (mg/l)	3.48	3.26	**3.24** (2.82-3.66)
EC_{50} GA (mg/l)	2.59	2.40	**2.38** (2.08-2.69)
EC_{50} AA (mg/l)	1.70	1.54	**1.53** (1.34-1.71)
MTT_{CI} (h)	132	130	**130** (126-134)
MTT_{PC} (h)	13.6	10.2	**10.0** (8.92-11.00)
γ (in Emax model)	1.28	1.25	**1.25** (1.17-1.33)
Residual variability (%)	19.1	19.8	**19.9** (19.4-20.4)
ω_{EC50} (%)	11.3	11.1	**11.1** (9.9-12.3)
ω_{MTTC1} (%)	3.69	5.09	**5.15** (3.90-6.40)

[a] 72 year old *1/*1

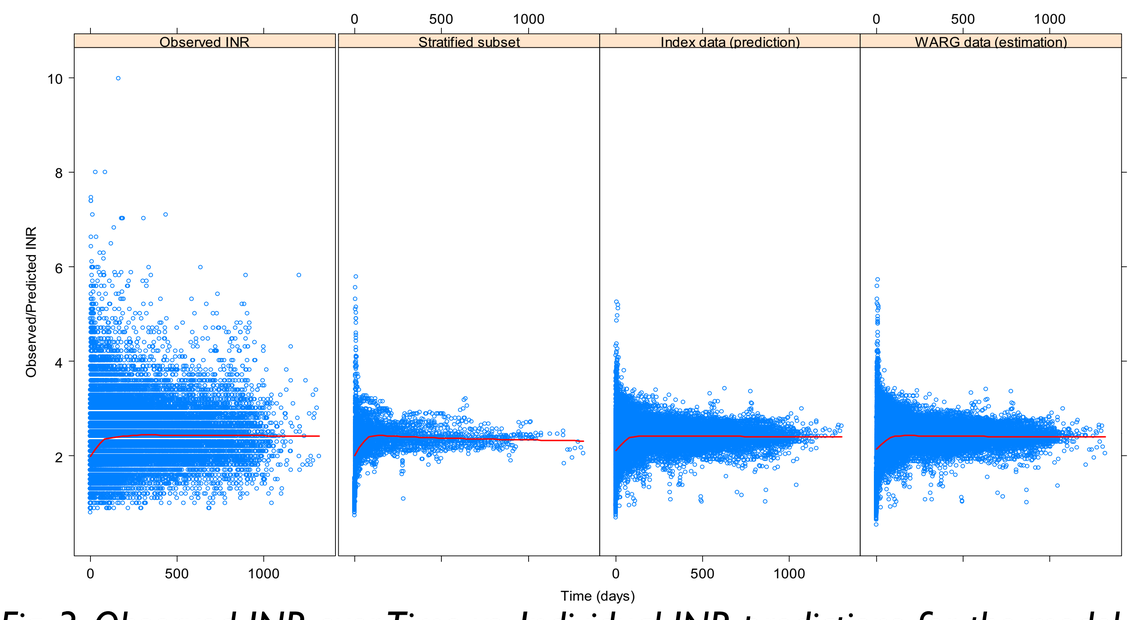

Fig. 3. Observed INR over Time vs. Individual INR predictions for the model building subset (n=196), the Index dataset (n=1287, WARG – subset, predictions based on parameter estimates from the subset) and the complete WARG dataset (n=1426).

References

[1] Hamberg AK *et al.* Clin Pharmacol Ther, 2007;81, [2] Wadelius M *et al.* Blood, 2009; 113, [3] Jacqmin *et al.* J Pharmacokinet Pharmacodyn, 2007; 34